Honeywell

5A TO 25A MULTI - RANGE CURRENT SENSOR

CATALOGUE LISTING
CSNE151-005

DO NOT SCALE PRINT

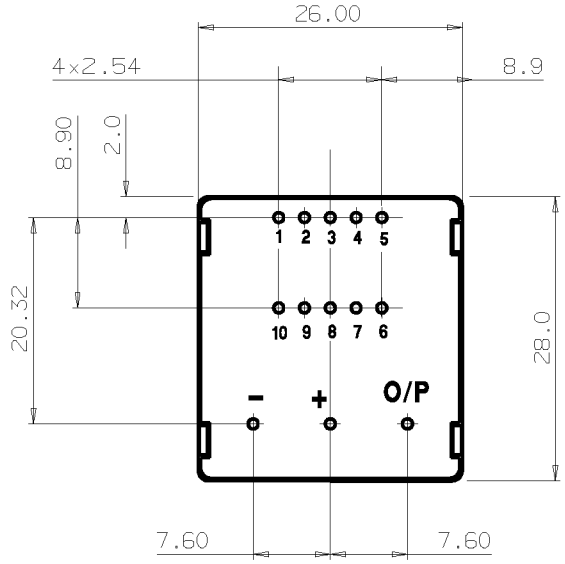

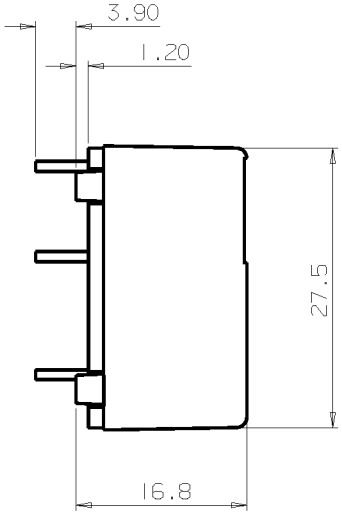

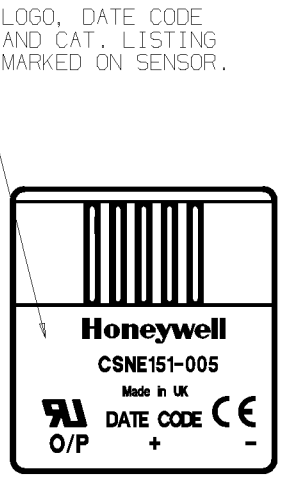

RECOMMENDED P.C.B. HOLE :- Ø1.2

ELECTRICAL SCHEMATIC

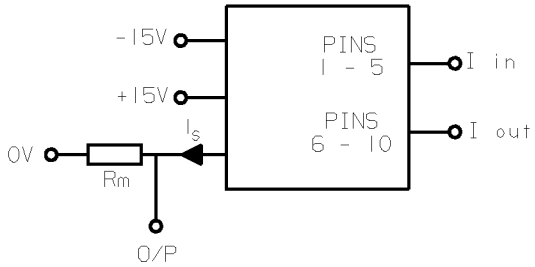

DESCRIPTION

CSNE151-005 IS A MULTI-RANGE CURRENT SENSOR MODULE BASED ON THE 'NULL BALANCE' HALL EFFECT PRINCIPLE. 5,6,8,12 OR 25A CAN BE MEASURED BY SELECTING THE APPROPRIATE 1 TO 5 PRIMARY TURNS.

ELECTRICAL DATA

NOMINAL PRIMARY CURRENT Ipn:- 25A rms
MEASURING RANGE Ip:- 0 TO ±36A
LOAD RESISTANCE:- Rm min Rm max
±25A.t max 100Ω 320Ω
+36A.t max 100Ω 190Ω

SUPPLY VOLTAGE:- ±15V (±5%)
DIELECTRIC STRENGTH:- 5.0KVrms/50Hz/1min.
CURRENT CONSUMPTION:- 10 + Is mA
PRIMARY INTERNAL RESISTANCE:- <1.25mΩ/TURN
SECONDARY INTERNAL RESISTANCE:- 110Ω MAX AT +70°C.

ACCURACY DATA

OFFSET :- ±0.05 mA TYP.
±0.15 mA MAX.
OFFSET DRIFT WITH TEMP.:- ±0.17mA TYP.
±0.6mA MAX.
LINEARITY:- ±0.2% Ipn
RESPONSE TIME :- <1µS
FREQUENCY:- DC TO 150KHz

ENVIRONMENTAL DATA

OPERATING TEMP.:- 0 TO +70°C
STORAGE TEMP.:- -40 TO +90°C

PRIMARY TURNS	PRIMARY CURRENT		NOM. OUTPUT CURRENT (mA) Is	PRIMARY RESISTANCE (mΩ)	PRIMARY INSERTION INDUCTANCE (µH)	PIN CONNECTIONS
	NOM. Ipn (A)	MAX. Ip (A)				
1	25	36	25	0.3	0.023	5 4 3 2 1 IN; 6 7 8 9 10 OUT
2	12	18	24	1.1	0.09	5 4 3 2 1 IN; 6 7 8 9 10 OUT
3	8	12	24	2.5	0.21	5 4 3 2 1 IN; 6 7 8 9 10 OUT
4	6	9	24	4.4	0.37	5 4 3 2 1 IN; 6 7 8 9 10 OUT
5	5	7	25	6.3	0.58	5 4 3 2 1 IN; 6 7 8 9 10 OUT

CSNE151-005

REPLACES

DRAWING NUMBER A301-01

ISSUE 1 2

RELEASE No

REVISIONS
2 WJ 1/98

DRAWN M. LOCH 1/96
CHECK
DESIGN
AUTHOR'N

THE COPYRIGHT OF THIS DRAWING IS THE PROPERTY OF HONEYWELL LTD. THE DRAWING IS SUPPLIED IN CONFIDENCE AND MUST NOT BE USED FOR ANY PURPOSE OTHER THAN THAT FOR WHICH IT IS SUPPLIED.

THIRD ANGLE PROJECTION

MODIFY ON CAD3D SYSTEM ONLY

SCALE :- 2:1

DIMENSIONS ARE IN MILLIMETRES